11

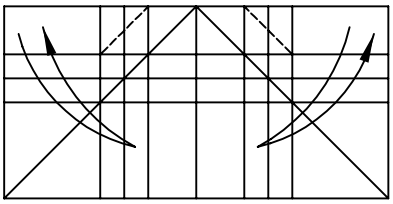

12

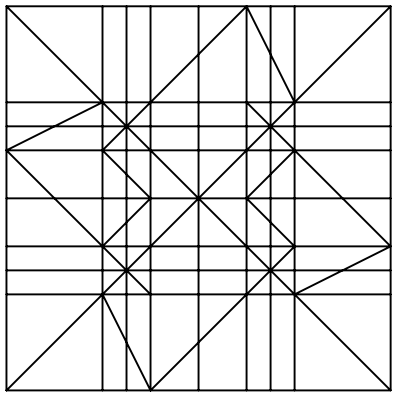

13

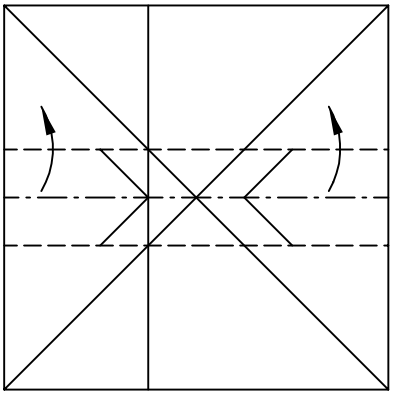

14

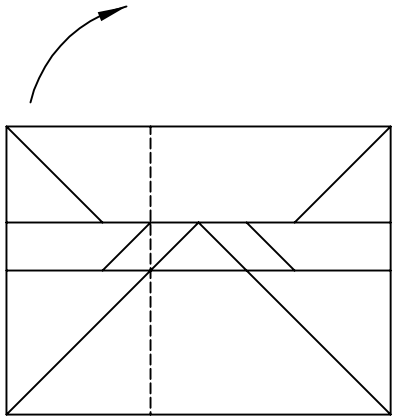

15

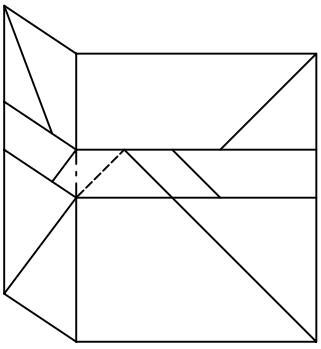

16

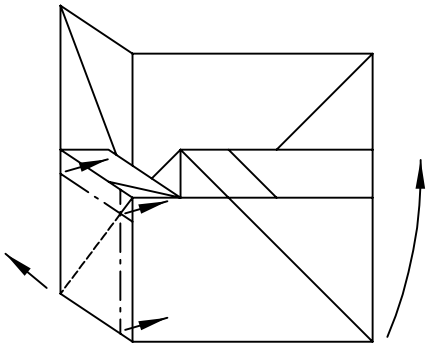

11. Valley fold the two indicated 45 degree lines. Unfold completely.
12. The precreasing is done.
13. Pleat the center.
14. Valley fold the left side up, so it is perpendicular to the rest of the paper.
15. Form a rib out of the left half of the pleat. The creases exist already.
16. Open double sink the bottom left corner (on the 5/16 lines). Raise the lower edge to be vertical.