17

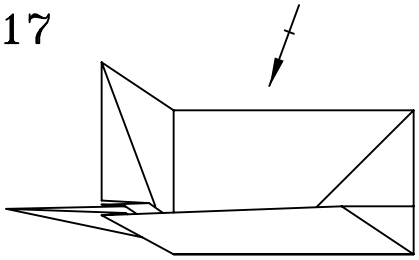

18

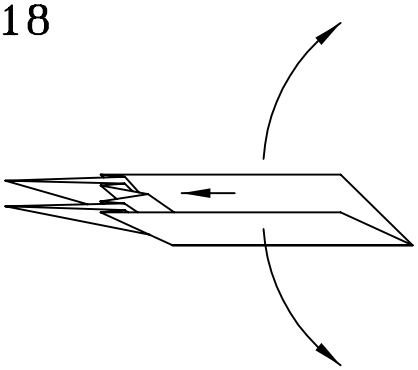

19

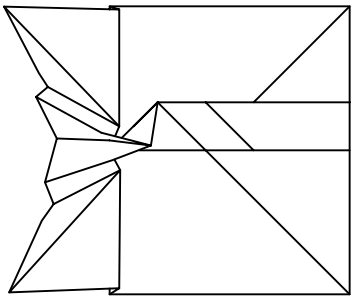

20

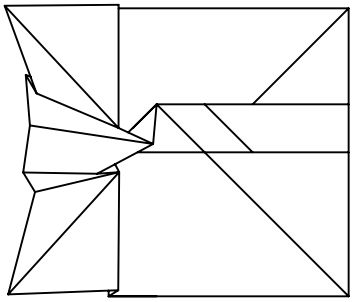

21

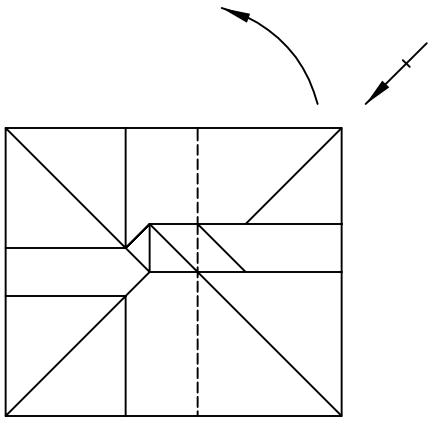

22

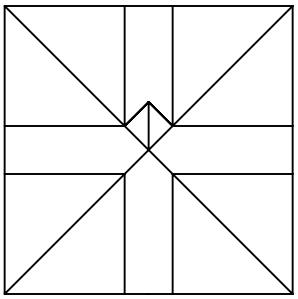

17. Repeat step 16 on the top half of the paper.
18. Lower the top, bottom, and left edges of the paper, while squash folding the central rib...
19. ... continue to squash fold the central rib...
20. ... and flatten the model.
21. Repeat steps 14–20 on the right.
22. The base is ready.